Completed document

Model: SDV601

PNC: 91600208401

MODELS: SDV601

EX. VIEW DRAWING 5236
GENERAL ASSEMBLY

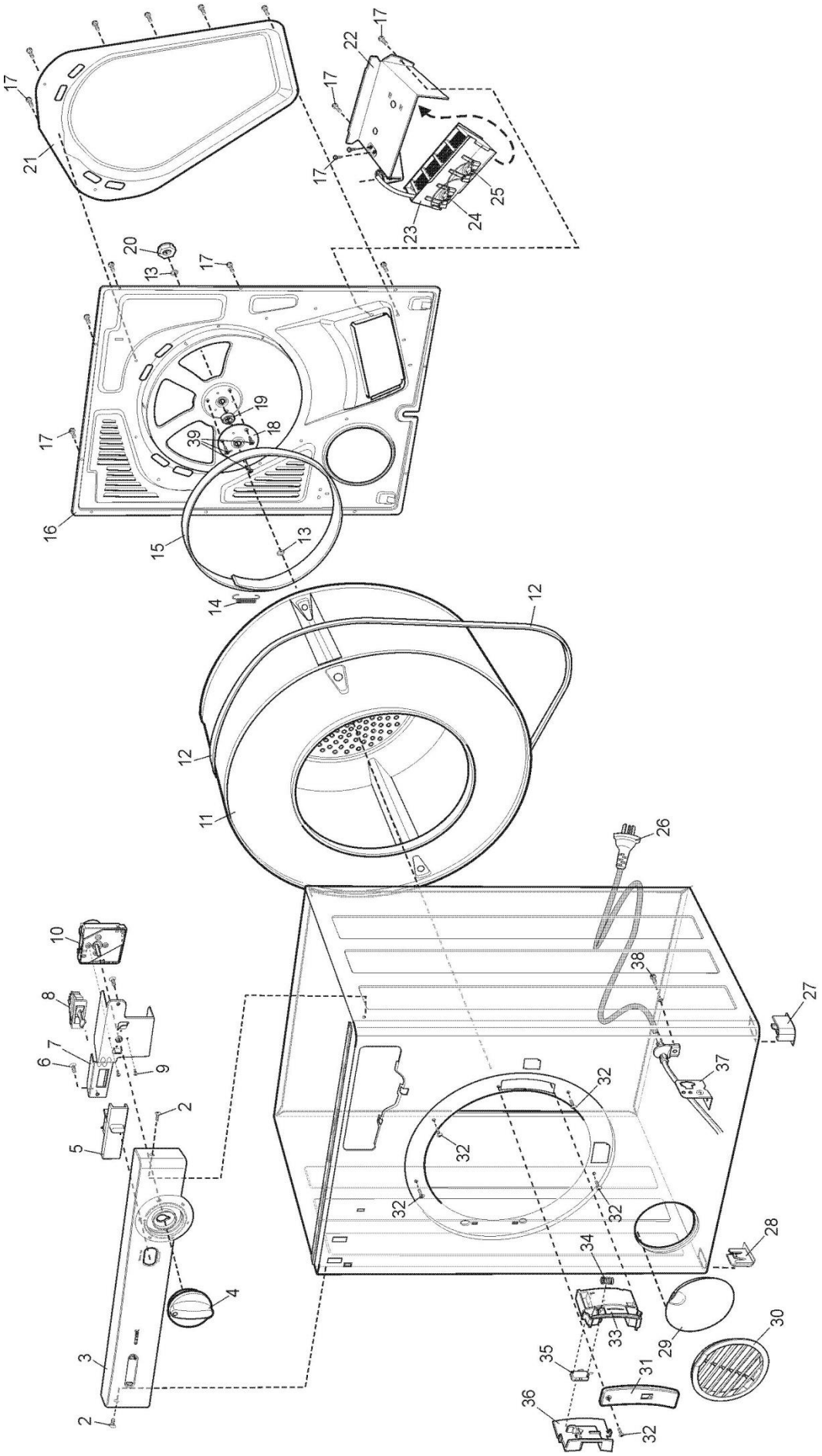

MODELS: SDV601

EX. VIEW DRAWING 5246
FUNCTIONAL ASSEMBLY

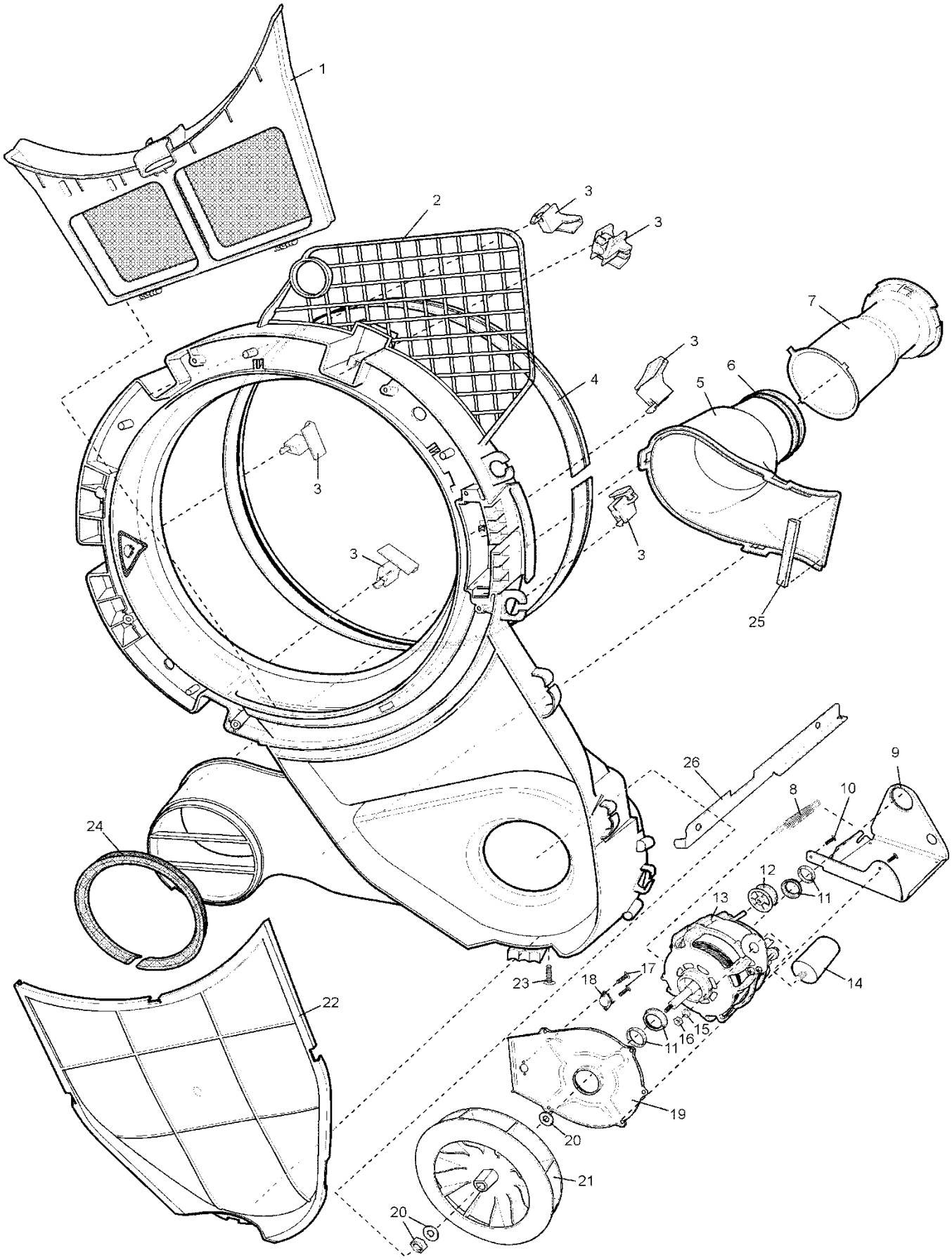

MODELS: SDV601
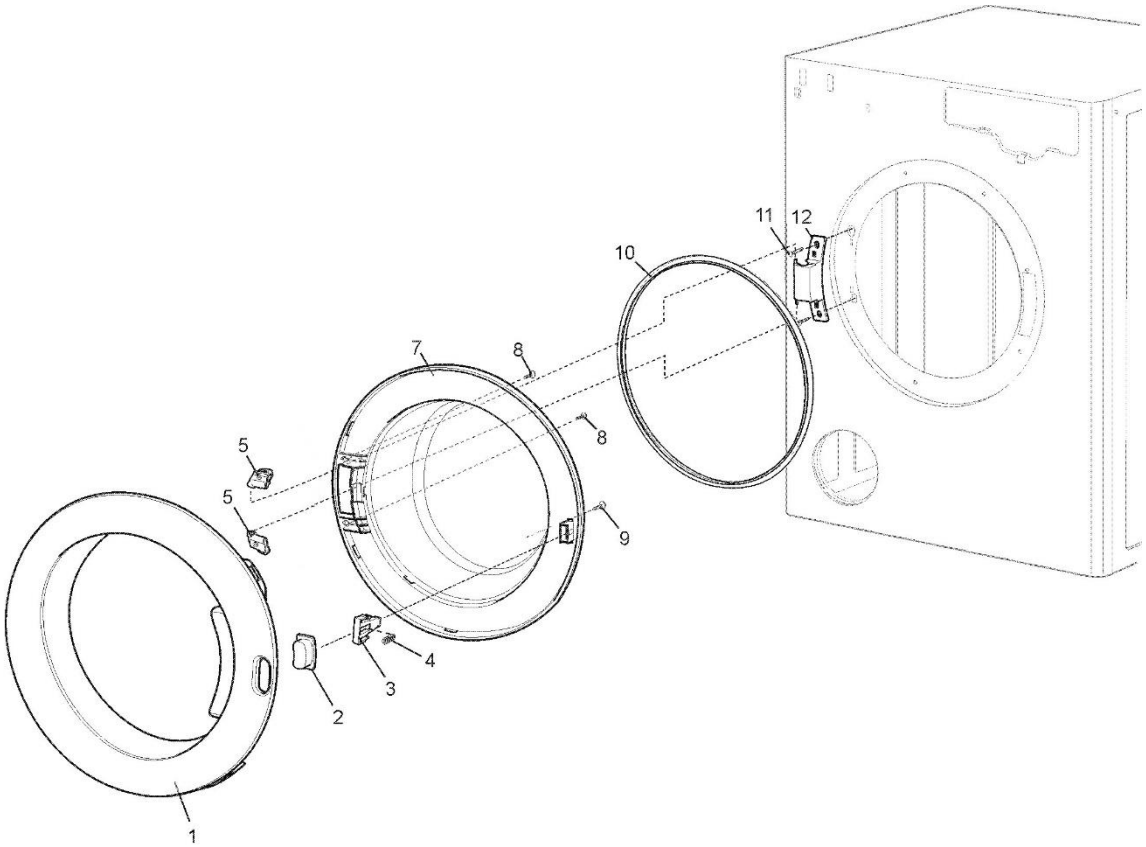
EX. VIEW DRAWING 5241A
DOOR ASSEMBLY